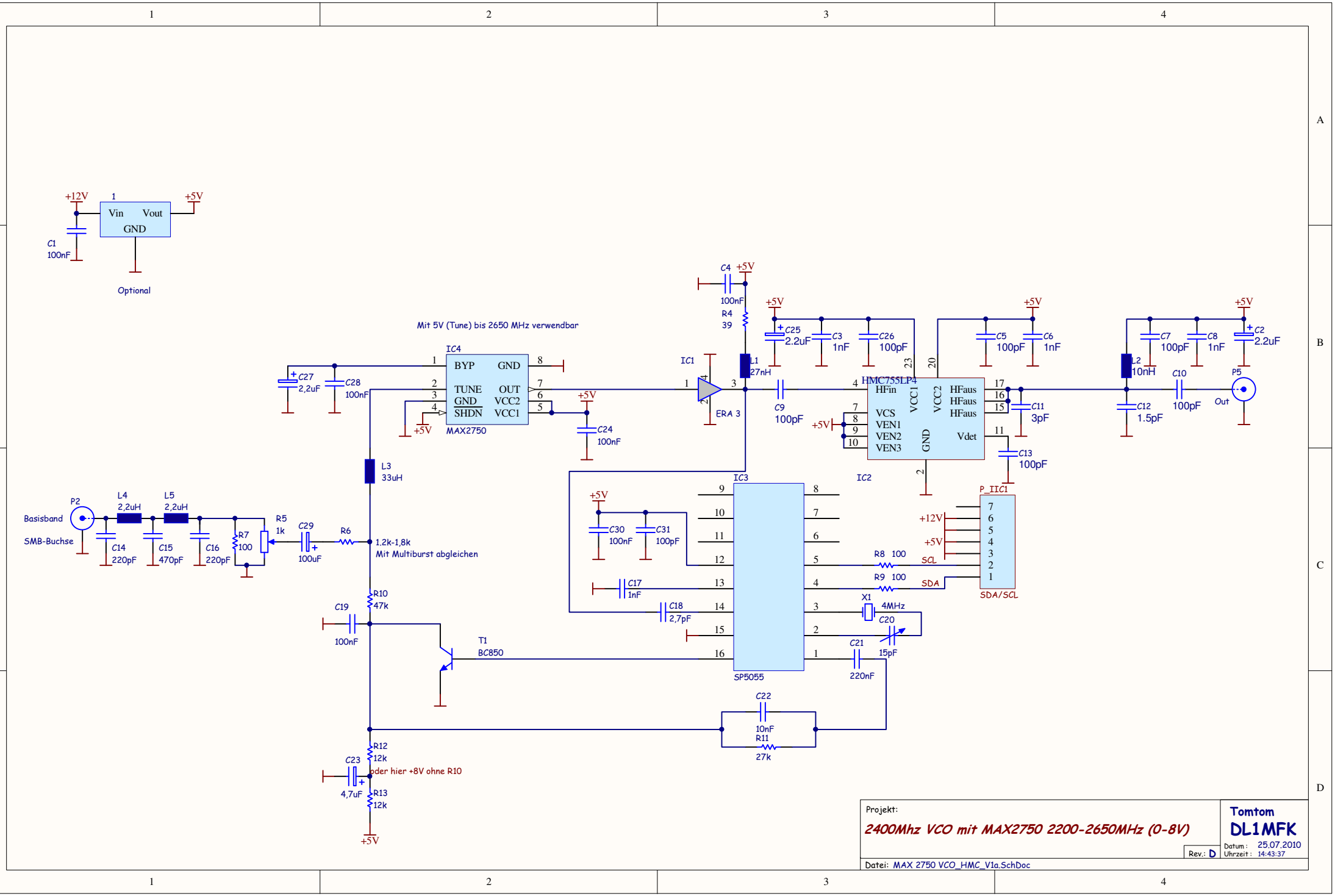
+12V
Vin
Vout
GND
+5V
C1
100nF
Optional
Mit 5V (Tune) bis 2650 MHz verwendbar
IC4
BYP
GND
TUNE
OUT
GND
VCC2
SHDN
VCC1
MAX2750
C27
2,2uF
C28
100nF
C24
100nF
C4
100nF
R4
39
IC1
ERA 3
L1
27nH
C9
100pF
C25
2.2uF
C3
1nF
C26
100pF
HMC755LP4
HFin
VCS
VEN1
VEN2
VEN3
VCC1
VCC2
GND
HFaus
Vdet
C5
100pF
C6
1nF
C11
3pF
C13
100pF
C7
100pF
C8
1nF
C2
2.2uF
L2
10nH
C12
1.5pF
C10
100pF
P5
Out
L3
33uH
P2
Basisband
SMB-Buchse
L4
2,2uH
L5
2,2uH
C14
220pF
C15
470pF
C16
220pF
R7
100
R5
1k
C29
100uF
R6
1.2k-1,8k
Mit Multiburst abgleichen
IC3
IC2
C30
100nF
C31
100pF
C17
1nF
C18
2,7pF
SP5055
P_IIC1
SDA/SCL
R8 100
R9 100
SCL
SDA
X1
4MHz
C20
15pF
C21
220nF
C19
100nF
R10
47k
T1
BC850
C22
10nF
R11
27k
R12
12k
C23
4,7uF
oder hier +8V ohne R10
R13
12k
Projekt:
2400Mhz VCO mit MAX2750 2200-2650MHz (0-8V)
Tomtom
DL1MFK
Datum : 25.07.2010
Uhrzeit : 14:43:37
Rev.: D
Datei: MAX 2750 VCO_HMC_V1a.SchDoc

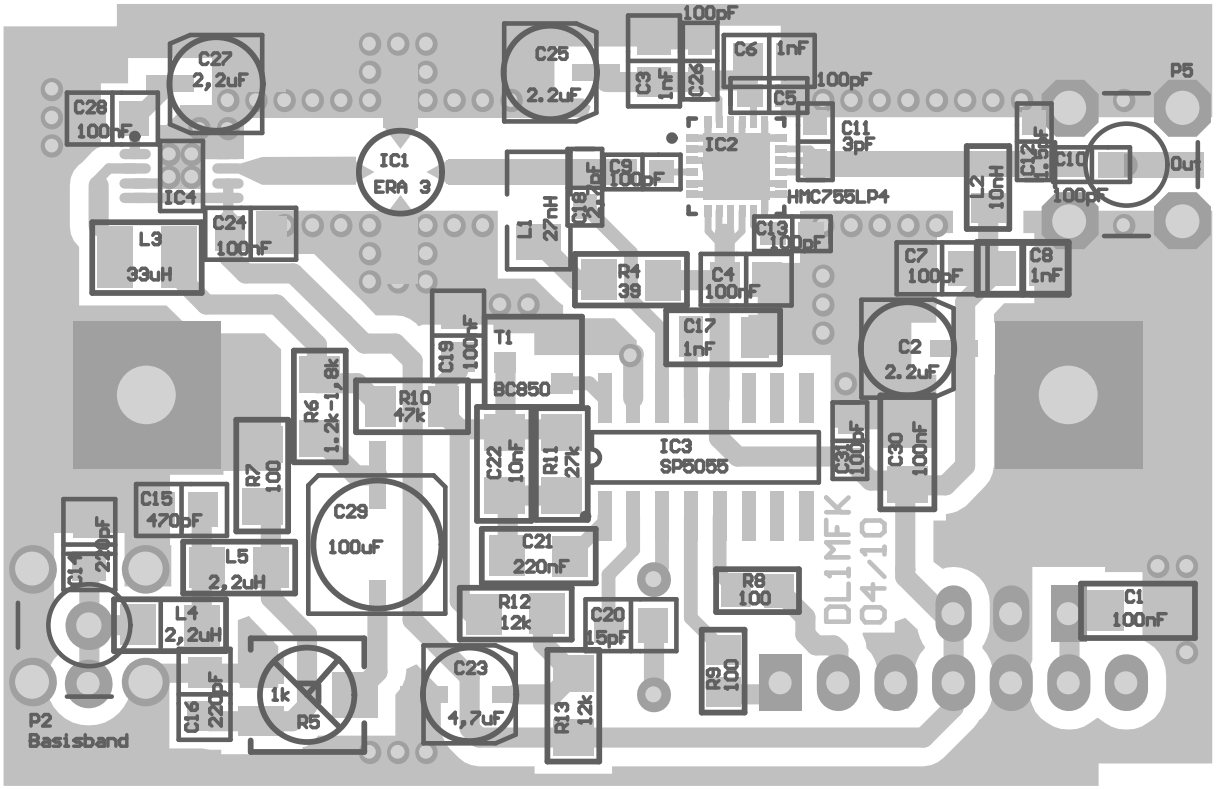
C27
2,2uF
C28
100nF
IC4
L3
33uH
C24
100nF
IC1
ERA 3
C25
2.2uF
C3
1nF
C26
100pF
C6
1nF
C5
100pF
IC2
C11
3pF
HMC755LP4
C9
100pF
C18
2.2pF
L1
27nH
C13
100pF
R4
39
C1
100nF
C17
1nF
C12
1.5pF
C10
100pF
L2
10nH
C7
100pF
C8
1nF
C2
2.2uF
P5
Out
C19
100nF
T1
BC850
R10
47k
R6
1.2k-1,8k
R7
100
C22
10nF
R11
27k
IC3
SP5055
C31
100pF
C30
100nF
C15
470pF
C29
100uF
C14
220pF
L5
2,2uH
L4
2,2uH
C21
220nF
R12
12k
C20
15pF
R8
100
R9
100
C1
100nF
C16
220pF
1k
R5
C23
4,7uF
R13
12k
P2
Basisband
DL1MFK
04/10

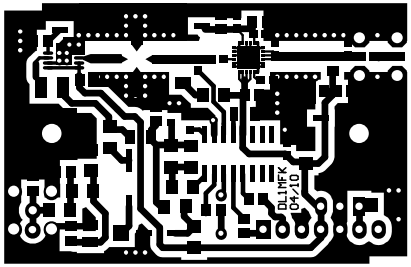
DLIMFK
04/10